1.

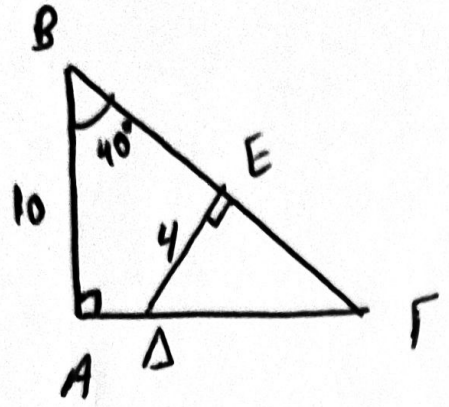

(α) Βρ.λ την ΑΓ και ΒΓ

(β) Βρ.λ ΕΓ και ΓΔ

(γ) Βρ.λ το εμβαδόν του ΑΒΕΔ.

2.

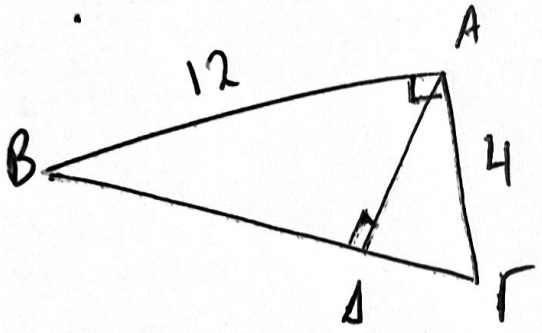

(α) Βρ.λ την $\hat{B}$

(β) Βρ.λ την ΒΓ

(γ) Βρ.λ το ΑΔ

(δ) Βρ.λ ΔΓ.

1.

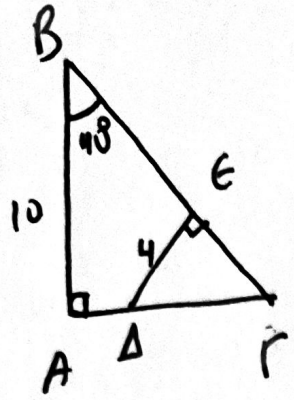

(α) Ψαχνω την ΑΓ

$\varepsilon\varphi 40^\circ = \frac{A\Gamma}{10}$

$0,84 = \frac{A\Gamma}{10}$

$\boxed{A\Gamma = 8,4}$

Ψαχνω την ΒΓ

$\sigma\upsilon 40 = \frac{10}{B\Gamma}$

$0,76 = \frac{10}{B\Gamma}$

$B\Gamma = \frac{10}{0,76}$

$\boxed{B\Gamma = 13,16}$

(Β) Ψαχνω την ΕΓ

Η γωνια $\hat{\Gamma} = 90 - 40$

$\hat{\Gamma} = 50$

$\varepsilon\varphi\hat{\Gamma} = \frac{4}{E\Gamma}$

$\varepsilon\varphi 50 = \frac{4}{E\Gamma}$

$1,19 = \frac{4}{E\Gamma}$

$E\Gamma = \frac{4}{1,19}$

$\boxed{E\Gamma = 3,36}$

Ψαχνω την ΓΔ

$\eta\mu 50 = \frac{4}{\Gamma\Delta}$

$0,76 = \frac{4}{\Gamma\Delta}$

$\Gamma\Delta = \frac{4}{0,76}$

$\boxed{\Gamma\Delta = 5,26}$

(δ) Ψαχνω το $(A\Delta EB)$

$(A\Delta EB) = (\hat{AB\Gamma}) - (\hat{E\Delta\Gamma})$

$(A\Delta EB) = \frac{10 \cdot 8,4}{2} - \frac{4 \cdot 3,36}{2}$

$(A\Delta EB) = 42 - 6,72$

$(A\Delta EB) = 35,28.$

2.

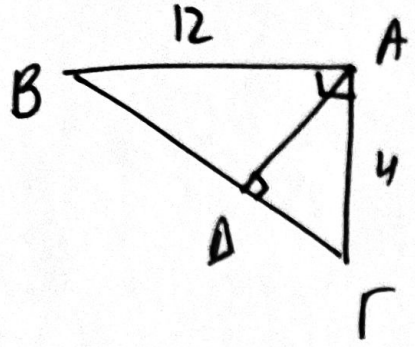

(α) Ψαχνω την $\hat{B}$

$\varepsilon\varphi\hat{B} = \frac{4}{12}$

$\varepsilon\varphi\hat{B} = 0,33$

$\hat{B} = 18^\circ$

(β) Ψαχνω την ΒΓ

$\eta\mu 18^\circ = \frac{4}{B\Gamma}$

$0,31 = \frac{4}{B\Gamma}$

$B\Gamma = \frac{4}{0,31}$

$B\Gamma = 12,9$

(γ) Ψαχνω την ΑΔ

$\eta\mu 18 = \frac{A\Delta}{12}$

$0,31 = \frac{A\Delta}{12}$

$A\Delta = 0,31 \cdot 12$

$A\Delta = 3,72$

(δ) ψαχνω ΔΓ

Αφου $\hat{B} = 18$ τοτε

$\hat{\Gamma} = 90 - 18 = 72^\circ$

$\hat{\Gamma} = 72^\circ$

αρα $\sigma\upsilon 72 = \frac{\Gamma\Delta}{4}$

$0,31 = \frac{\Gamma\Delta}{4}$

$\Gamma\Delta = 0,31 \cdot 4$

$\Gamma\Delta = 1,24$

Ενότητα 21

6. $w = -3 \qquad a_{11} = -8$

ⓐ $a_v = a_1 + w(v-1)$

$a_{11} = a_1 + 10w$

$-8 = a_1 + 10(-3)$

$-8 = a_1 - 30$

$30 - 8 = a_1$

$a_1 = 22$

$a_v = 22 - 3(v-1)$

$a_{21} = 22 - 3 \cdot 20$

$a_{21} = 22 - 60$

$\boxed{a_{21} = -38}$

ⓑ $a_v = -59 \Rightarrow 22 - 3(v-1) = -59$

$59 + 22 = 3(v-1)$

$81 = 3(v-1)$

$27 = v - 1$

$v = 28$

$a_{28} = -59$

7. $a_1 = 7$ $\quad a_{19} = -47$

Ψάχνω τον a_{10}

$$a_v = a_1 + \omega(v-1)$$

$$a_{19} = 7 + 18\omega$$

$$-47 = 7 + 18\omega$$

$$-54 = 18\omega$$

$$\boxed{\omega = -3}$$

$$a_v = a_1 + \omega(v-1)$$

$$a_{10} = 7 - 3 \cdot 9$$

$$a_{10} = 7 - 27$$

$$a_{10} = -20.$$

8. $a_4 = 11$

$a_{11} = 53$

(a) $\boxed{a_v = a_1 + \omega(v-1)}$

$a_4 = a_1 + 3\omega \Rightarrow 11 = a_1 + 3\omega$

$a_{11} = a_1 + 10\omega \Rightarrow 53 = a_1 + 10\omega$

$$\begin{cases} a_1 + 3\omega = 11 \\ a_1 + 10\omega = 53 \end{cases} \ominus \quad -7\omega = -42$$

$\boxed{\omega = 6}$

$a_1 + 18 = 11$

$\boxed{a_1 = -7}$

(B) $a_{21} = -7 + 6 \cdot 20$

$a_{21} = -7 + 120$

$a_{21} = 113.$

10. $a_7 = 39$

$$\boxed{a_v = a_1 + w(v-1)}$$

$a_7 = a_1 + 6w$

$39 = a_1 + 6w$

$a_{15} = a_1 + 14w$

$a_{20} = a_1 + 19w$

$a_{15} = a_{20} + 15$

$a_1 + 14w = a_1 + 19w + 15$

$14w - 19w = 15$

$-5w = 15$

$w = -3$

$39 = a_1 + 6(-3)$

$39 = a_1 - 18$

$a_1 = 39 + 18$

$a_1 = 57$

Apo

$a_{20} = 57 - 3 \cdot 19$

$a_{20} = 57 - 57$

$a_{20} = 0$

17. $S_v = \frac{v}{2}(2a_1 + w(v-1))$

$S_{21} = \frac{21}{2}(2.(-5) + 3.20)$

$S_{21} = \frac{21}{2}(-10 + 60)$

$S_{21} = \frac{21}{2} \cdot 50$

$S_{21} = 21.25$

$S_{21} = 525$

18. ⓐ $-4, -1, 2, \ldots$

$a_1 = -4$

$w = 3$

$S_{10} = \frac{10}{2}(2 \cdot (-4) + 3 \cdot 9)$

$S_{10} = 5(-8 + 27)$

$S_{10} = 5 \cdot 19$

$S_{10} = 95$

Ⓑ $-1, -\frac{3}{2}, -2, \ldots$

$w = -\frac{3}{2} - (-1)$

$w = -\frac{3}{2} + 1$

$w = -\frac{3}{2} + \frac{2}{2}$

$w = -\frac{1}{2}$

$a_1 = -1$

$S_{10} = \frac{10}{2}(2 \cdot (-1) + \frac{1}{2} 9)$

$S_{10} = 5(-2 - \frac{9}{2})$

$2 \cdot S_{10} = 5(-4 - 9)$

$2 \cdot S_{10} = -13 \cdot 5$

$S_{10} = \frac{-65}{2}$

19. ⓐ $a_5 + a_6 + \dots + a_{13}$

$7, 10, 13, \dots$

$a_1 = 7$

$\omega = 3$

$a_1, a_2, a_3, a_4, a_5, \dots, a_{12}, a_{13}$

S_4 S

S_{13}

$S_4 = \frac{4}{2} \cdot (2 \cdot 7 + 3 \cdot 3)$

$S_4 = 2 \cdot 23$

$S_4 = 46$

$S_{13} = \frac{13}{2}(2 \cdot 7 + 3 \cdot 12)$

$S_{13} = 13(7 + 18)$

$S_{13} = 25 \cdot 13$

$S_{13} = 325$

$S = 325 - 46 = 279.$

→ a_{20}

20. (a) $3+7+11+\dots+79$

$$\left.\begin{array}{l} a_1 = 3 \\ w = 4 \end{array}\right\} \quad a_v = a_1 + w(v-1)$$

$$a_v = 3 + 4(v-1)$$

$$79 = a_v$$

$$79 = 3 + 4(v-1)$$

$$76 = 4(v-1)$$

$$19 = v - 1$$

$$v = 20$$

$$S_{20} = \frac{20}{2}(2 \cdot 3 + 4 \cdot 19)$$

$$S_{20} = 10(6 + 76) = 820.$$

22. $a_v = 5v - 3$

(a) $a_{v+1} - a_v = \omega$

(b) $5(v+1) - 3 - (5v - 3) = \omega$;

$5v + 5 - 3 - 5v + 3 = \omega$

$\omega = 5$

$a_1 = 2$

25. (a) 2, 4, 6, 8, ...

$a_1 = 2$

$\omega = 2$

$S_{100} = \frac{100}{2}(2.2 + 2 \cdot 99)$

$S_{100} = 100(2 + 99)$

$S_{100} = 10100$

(B) 1, 3, 5, 7, ...

$a_1 = 1$

$w = 2$

$$S_{50} = \frac{50}{2}(2 \cdot 1 + 2 \cdot 49)$$

$$S_{50} = 50(1 + 49)$$

$$S_{50} = 2500$$

(8) 18, 20, 22, ..., 250

$a_1 = 18$

$w = 2$

$a_v = 18 + 2(v-1)$

$$\boxed{a_v = 2v + 16}$$

$a_v = 250 \Rightarrow 2v + 16 = 250$

$2v = 250 - 16$

$2v = 234$

$v = 117.$

$$S_{117} = \frac{117}{2} \cdot (2 \cdot 18 + 2 \cdot 116)$$

$$S_{117} = 117 \ (18 + 116).$$

$$S_{117} = 117 \cdot 134$$

$$S_{117} = 15678.$$

36. $a_1 = 10$ $\quad w = 3$

(a) $a_{12} = 10 + 3 \cdot 11$

$a_{12} = 10 + 33$

$a_{12} = 43$

(b) $S_{12} = \frac{12}{2}(2 \cdot 10 + 3 \cdot 11)$

$S_{12} = 6(20 + 33)$

$S_{12} = 6 \cdot 53$

$S_{12} = 318$.

① $a_7 = 10 + 3 \cdot 6$ $\quad a_v = a_1 + w(v-1)$

$a_7 = 28$ καθίσματα δωρεάν.

Άρα $318 - 28 = 290$.

Κόστος: $290 \cdot 9 = 2610$ €

Γεωμετρική πρόοδος

$$\alpha_\nu = \alpha_1 \cdot \lambda^{\nu-1}$$

$$\alpha_{\nu+1} = \alpha_\nu \cdot \lambda$$

$$S_\nu = \alpha_1 \cdot \frac{\lambda^\nu - 1}{\lambda - 1}$$

α, β, γ διαδοχικοί

$\Rightarrow \beta^2 = \alpha\gamma$.

9. (B) $18 - 6 + 2 - \dots + \frac{2}{81}$

$a_1 = 18$

$\lambda = -\frac{1}{3}$

$$a_v = a_1 \cdot \lambda^{v-1}$$

$$\frac{2}{81} = 18 \cdot \left(-\frac{1}{3}\right)^{v-1}$$

$$\frac{2}{18 \cdot 81} = \left(-3^{-1}\right)^{v-1}$$

$$\frac{1}{9 \cdot 81} = (-3)^{1-v}$$

$$\frac{1}{3^2 \cdot 3^4} = (-3)^{1-v}$$

$$\frac{1}{3^6} = (-3)^{1-v}$$

$$3^{-6} = (-3)^{1-v}$$

$$(-3)^{-6} = (-3)^{1-v}$$

$$-6 = 1 - v$$

$$v = 7$$

$$S_v = a_1 \cdot \frac{2^v - 1}{2 - 1}$$

$$S_7 = 18 \cdot \frac{\left(-\frac{1}{3}\right)^7 - 1}{-\frac{1}{3} - 1}$$

$$S_7 = 18 \frac{-\frac{1}{3^7} - 1}{-\frac{4}{3}}$$

ICTД.

7. $\underbrace{\alpha, \beta, \gamma}$

διαδοχικοί

$$\beta^2 = \alpha\gamma$$

(13) $\underbrace{3x-2,\ 2-3x,\ x-1}$

$$(2-3x)^2 = (3x-2)(x-1)$$

$$4 - 12x + 9x^2 = 3x^2 - 3x - 2x + 2$$

$$6x^2 - 7x + 2 = 0$$

$$\Delta = 49 - 48 = 1 \qquad x = \frac{7 \pm 1}{12}$$

$\frac{2}{3}$

$\frac{1}{2}$

3. ⓑ $a_1 = -\frac{2}{3}$

$a_4 = 18$

$a_v = a_1 \cdot \lambda^{v-1}$

$a_1 = -\frac{2}{3}$

$a_1 \cdot \lambda^3 = 18$ ⋮

$\frac{a_1}{a_1 \cdot \lambda^3} = \frac{-\frac{2}{3}}{\frac{18}{1}}$

$\frac{1}{\lambda^3} = -\frac{2}{3 \cdot 18}$

$\lambda = -3$

$\lambda^3 = -\frac{18 \cdot 3}{2}$

$\lambda^3 = -27$

$$a_8 = -\frac{2}{3} \cdot (-3)^7$$

$$a_8 = +2 \cdot 3^{-1} \cdot 3^7$$

$$a_8 = 2 \cdot 3^6$$

1. ⑤ $\frac{16}{81}, -\frac{8}{27}, \frac{4}{9}, \cdots$

$a_1 \quad a_2 \quad a_3$

$$\frac{a_2}{a_1} = \lambda \iff \frac{-\frac{8}{27}}{\frac{16}{81}} = \lambda$$

$$\iff -\frac{8 \cdot 81}{27 \cdot 16} = \lambda \iff -\frac{8 \cdot 3 \cdot 27}{27 \cdot 2 \cdot 8} = \lambda$$

$$\lambda = -\frac{3}{2}$$

Ψαχνω a_9.

$$a_v = a_1 \cdot \lambda^{v-1}$$

$$a_v = \frac{16}{81} \cdot \left(-\frac{3}{2}\right)^{v-1}$$

$$a_9 = \frac{16}{81} \cdot \left(-\frac{3}{2}\right)^8$$

$$a_9 = \frac{16}{81} \cdot \frac{3^8}{2^8}$$

$$a_9 = \frac{2^4 \cdot 3^8}{3^4 \cdot 2^8}$$

$$a_9 = 2^{-4} \cdot 3^4$$

$$a_9 = \left(\frac{1}{2}\right)^4 \cdot 3^4 = \left(\frac{1}{2} \cdot 3\right)^4$$

$$a_9 = \left(\frac{3}{2}\right)^4$$

$$a_9 = \frac{81}{16}$$

2. $-16, 8, -4, \ldots$

$\boxed{a_1 = -16}$ $\quad (\lambda = -\frac{1}{2})$

$$a_v = a_1 \cdot \lambda^{v-1}$$

$$\frac{1}{8} = -16 \cdot \left(\frac{1}{2}\right)^{v-1}$$

$$\frac{1}{2^3} = -2^4 \cdot \left(-\frac{1}{2}\right)^{v-1}$$

$$2^{-3} = -2^4 \cdot \left(-\frac{1}{2}\right)^{v-1}$$

$$-\frac{2^{-3}}{2^4} = \left(-\frac{1}{2}\right)^{v-1}$$

$$-2^{-7} = \left(-\frac{1}{2}\right)^{v-1}$$

$$(-2)^{-7} = \left(-2^{-1}\right)^{v-1}$$

$$(-2)^{-7} = (-2)^{1-v}$$

$$-7 = 1 - v$$

$$v = 8$$

$$a_8 = \frac{1}{8}.$$

Να δοθεί ο ν-οστός όρος αριθμητικής προόδου

είναι $\alpha_\nu = \alpha_1 + \omega(\nu-1)$

Απόδειξη

$\alpha_1 = \alpha_1$

$\alpha_2 = \alpha_1 + \omega$

$\alpha_3 = \alpha_1 + 2\omega$

$\alpha_4 = \alpha_1 + 3\omega$

. . . . .

$\alpha_{100} = \alpha_1 + 99\omega$

. . . . .

$\boxed{\alpha_\nu = \alpha_1 + (\nu-1)\omega}$

version 2

Β' τρόπος

$$\left.\begin{aligned} a_1 &= a_1 \\ a_2 &= a_1 + w \\ a_3 &= a_2 + w \\ a_4 &= a_3 + w \\ &\ldots \\ a_v &= a_{v-1} + w \end{aligned}\right\} \oplus$$

$$\cancel{a_1} + \cancel{a_2} + \cancel{a_3} + \ldots + a_v = a_1 + \cancel{a_1} + w + \cancel{a_2} + w + \ldots + a_{v-1} + w$$

$$a_v = a_1 + w(v-1)$$

Επομενο Μαθημα

21

12

13

14

19 B

20 B

37